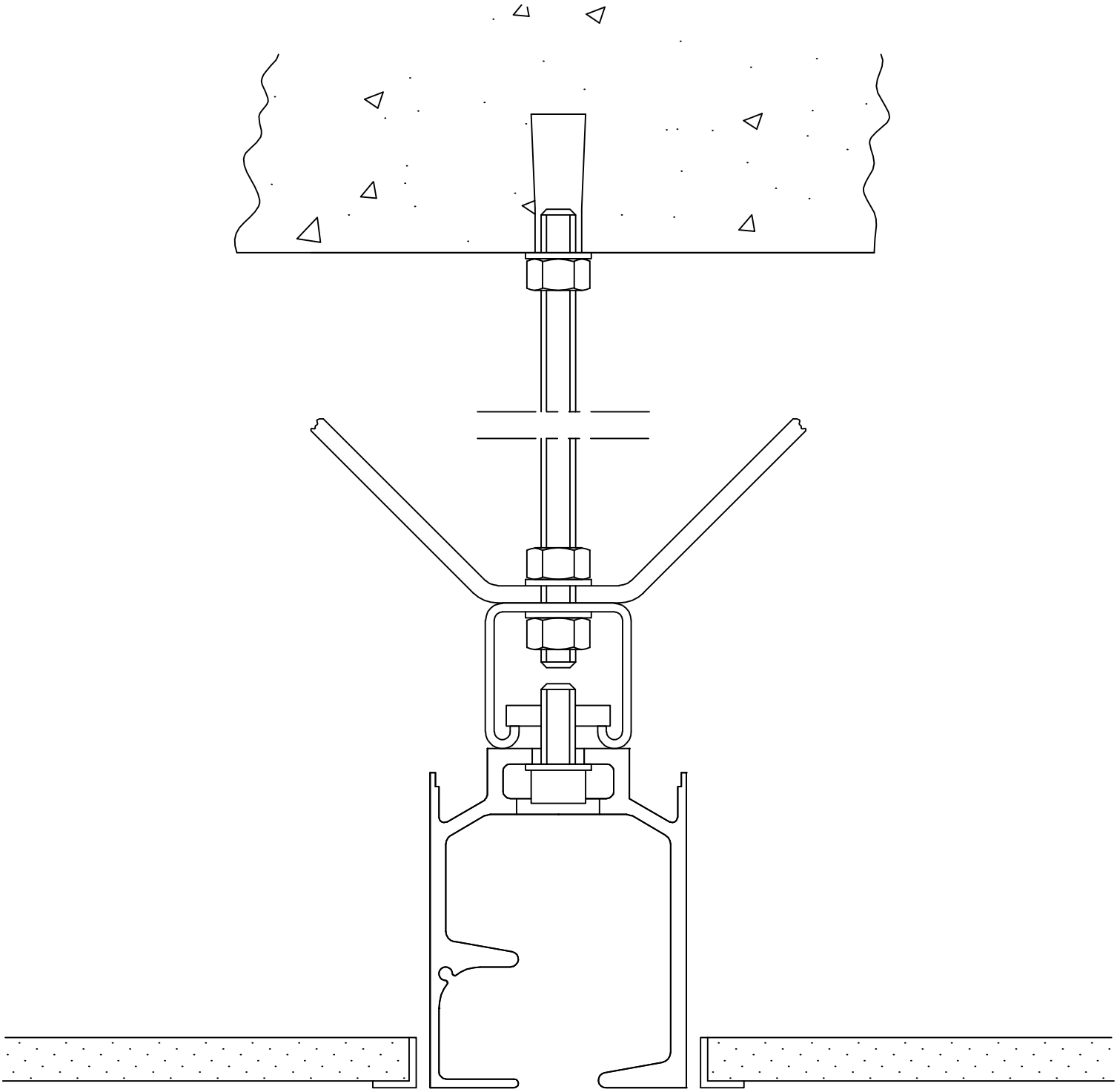

BECKER (SLIDING PARTITIONS) LTD.

TYPICAL MONOPLAN TRACK FIXING DETAIL
Two–point (42mm x 42mm) track fixed to
continuous galvanised channel suspended
from concrete by M10 threaded rods